Detached Motion Sensor with Bluetooth® 5.0 SIG Mesh

HC438V HCD438

1-10V Output DALI Output

HYTRONIK®

Class 2

Product Description

HC438V is a 1-10V control base whereas HCD438 is a DALI control base with 30mA DALI power supply built in. They work with a wide range of microwave and PIR sensor heads. They are ideal for metal luminaire designs because the Bluetooth module is placed inside the sensor heads instead of control base, so that the Bluetooth signal transmission is viable. They are suitable for any typical indoor applications such as office, classroom, car park, warehouse and other commercial/industrial areas. With Bluetooth wireless mesh networking, it makes communication much easier without any hardwiring, which eventually adds values to luminaires and saves costs for projects. Meanwhile, simple device setup and commissioning can be done via Koolmesh™ app.

HC438V

HCD438

App Features

- Quick setup mode & advanced setup mode
- Tri-level control
- Daylight harvest
- Circadian rhythm (Human centric lighting)
- Floorplan feature to simplify project planning
- Web app/platform for dedicated project management
- Koolmesh Pro iPad version for on-site configuration
- Grouping luminaires via mesh network
- Scenes
- Detailed motion sensor settings
- Dusk/Dawn photocell (Twilight function)
- Push switch configuration
- Schedule to run scenes based on time and date
- Astro timer (sunrise and sunset)
- Staircase function (master & slave)
- Internet-of-Things (IoT) featured
- Device firmware update over-the-air (OTA)
- Device social relations check
- Bulk commissioning (copy and paste settings)
- Dynamic daylight harvest auto-adaptation
- Power-on status (memory against power loss)
- Offline commissioning
- Different permission levels via authority management
- Network sharing via QR code or keycode
- Remote control via gateway support HBGW01
- Interoperability with Hytronik Bluetooth product portfolio
- Compatible with EnOcean switch EWSSB/EWSDB
- Continuous development in progress…

Hardware Features

- HC438V:1-10V output with:
  200VA~120V / 400VA~277V (capacitive)
  500W~120V / 1200W~277V (resistive)
- HCD438: 30mA DALI broadcast output
  for up to 15 LED drivers
- Plug'n'Play for flexible installation and cost saving assemble
- Support to control DT8 LED drivers (HCD438)
- Zero crossing detection circuit to reduce in-rush current and prolong relay lifetime (HC438V only)
- Loop-in and loop-out terminals for efficient installation (HC438V only)
- 5-year warranty

EnOcean
Self-powered IoT

Fully support
EnOcean switch

Technical Specifications

Input Characteristics	
Operating voltage	120~277V~50/60Hz
Stand-by power	<0.5W
Load ratings:	
HC438V	Capacitive: 200VA~120V / 400VA~277V Resistive: 500W~120V / 1200W~277V
HCD438	30mA (max. 15 devices)
Warming-up	20s

Safety and EMC (Common Data)	
Safety standard	UL773A , CSA-C22.2 No. 284
FCC standard	FCC Part 15C
Certificate	UL, CUL, FCC

Environment	
Operation temperature	Ta: -20°C ~ +55°C
Case temperature (Max.)	Tc: +75°C
IP rating	IP20

Mechanical Structure & Dimensions

HC438V (1-10V output with 1 push)

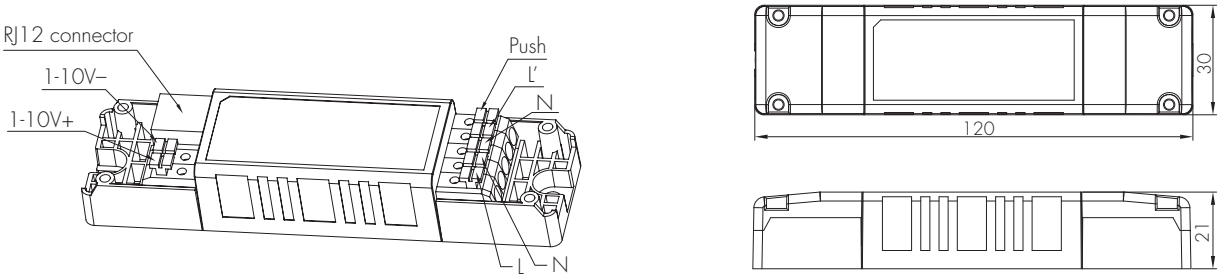

HCD438 (DALI output with 1 push)

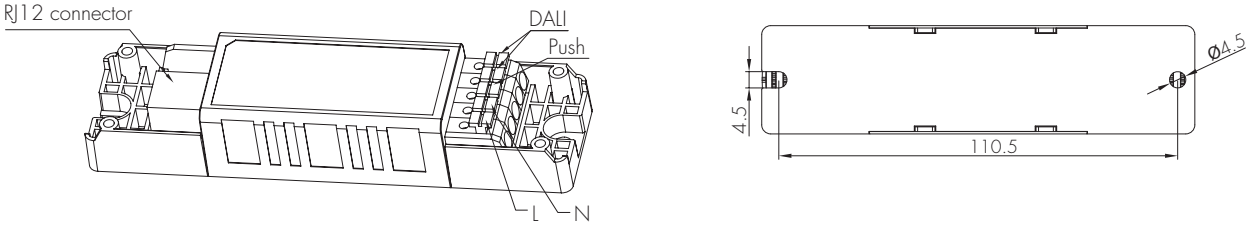

Wire Preparation

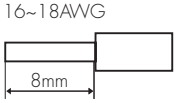

To make or release the wire from the terminal, use a screwdriver to push down the button.

Wiring Diagram

HC438V

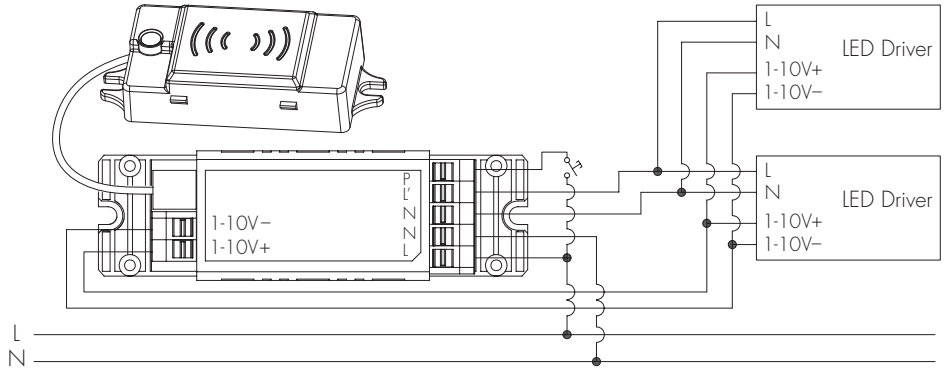

HCD438

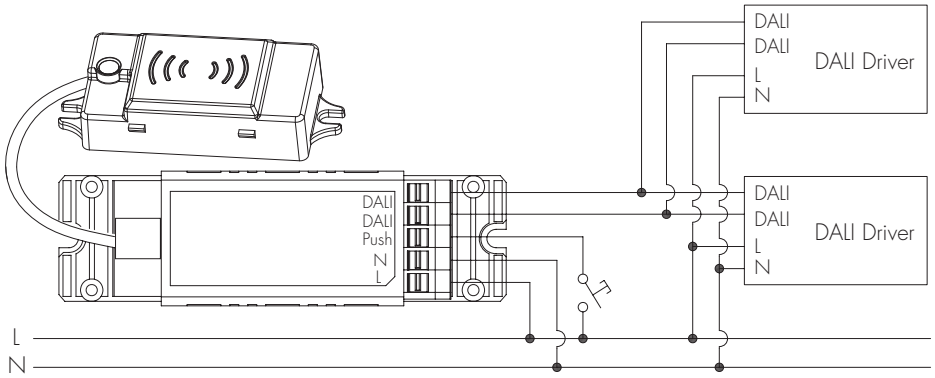

Technical Specifications for Sensor Heads

Bluetooth Transceiver	
Operation frequency	2.4 GHz - 2.483 GHz
Transmission power	4 dBm
Range (Typical indoor)	10~30m
Protocol	Bluetooth® 5.0 SIG Mesh

Environment	
Operation temperature	Ta: -20°C ~ +55°C
Storage temperature	-20°C ~ +70°C
Relative humidity	0 ~ 90%
IP rating	IP20

HF Sensor Properties (HBT01)	
Sensor principle	High Frequency (microwave)
Operation frequency	5.8GHz +/- 75MHz
Transmission power	<0.2mW
Detection range*	Max installation height: 3m Max detection range (Ø): 8m
Detection angle	30° ~ 150°

PIR Sensor Properties (HIR13 & HIR16 & HIR62 & HIR62/R)	
Sensor principle	PIR detection
Operation voltage	5VDC
Detection range *	HIR13 Max installation height: 15m (forklift) 12m (single person) Max detection range (Ø): 24m HIR16 Max installation height: 15m (forklift) 12m (single person) Max detection range: 18m * 6m (L * W) HIR62 Max installation height: 3m (single person) Max detection range (Ø): 12m HIR62/R Max installation height: 8m (single person) Max installation height: 12m (forklift) Max detection range (Ø): 14m
Detection angle	360°

* The detection range is heavily influenced by sensor placement (angle) and different walking paces. It may be reduced under certain conditions.

PIR & microwave sensor heads

The range of PIR and microwave sensor heads below offers powerful number of Plug'n'Play feature options to expand the flexibility of luminaires design. This approach to luminaire design reduces space requirements and component costs whilst simplifying production.

A. HBT01

Surface mounting
The cable length is around 30cm.

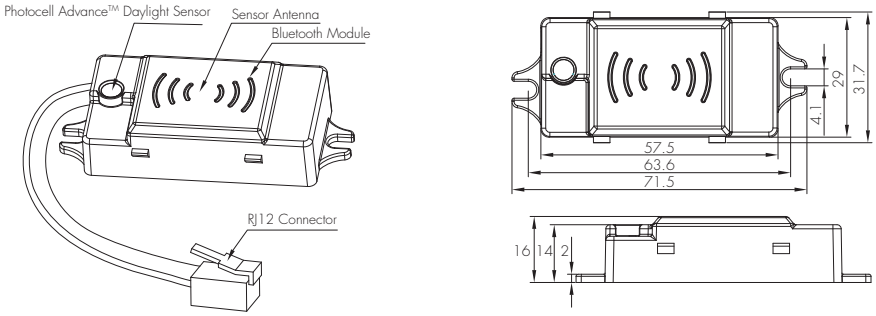

B. HBT02

Surface mounting
Without motion sensor
The cable length is around 30cm.

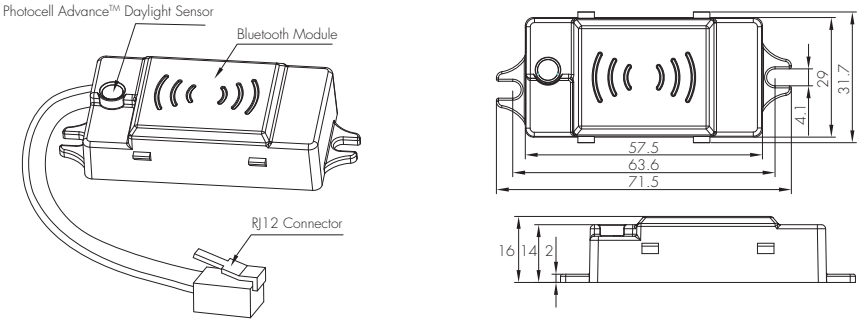

C. HIR13/S

Surface mounting
For highbay application
Lens part IP42 (IP64 can be made upon request)
The cable length is around 30cm.

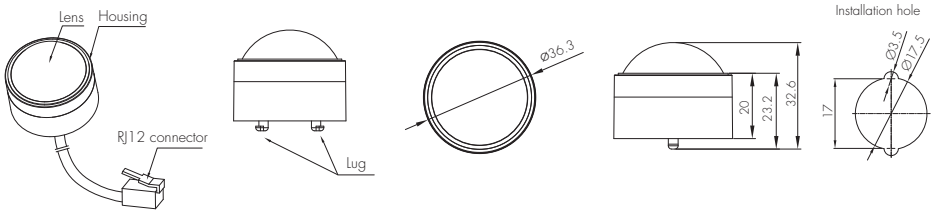

D. HIR13/F

Flush mounting
For highbay application
Lens part IP42 (IP64 can be made upon request)
The cable length is around 30cm.

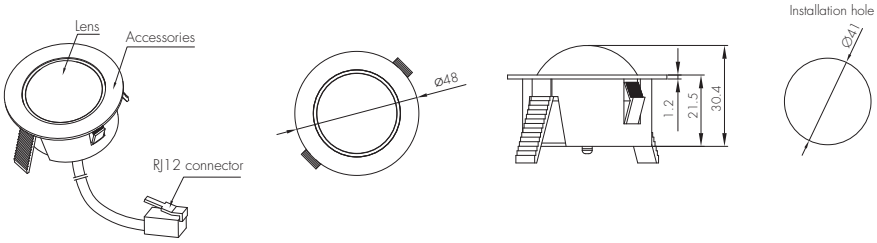

E. HIR13/C

Screw to the luminaire by conduit
For highbay application
Lens part IP42 (IP64 can be made upon request)
The cable length is around 30cm.

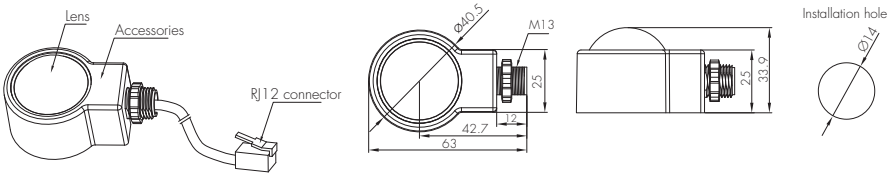

F. HIR16

PIR sensor head
For highbay application
IP65(lens part)
The cable length is around 30cm.

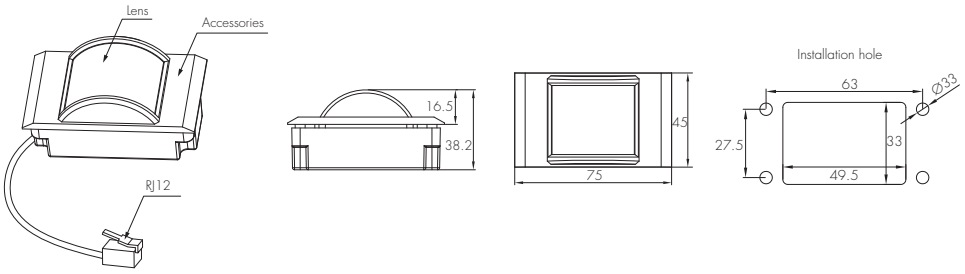

Installation for HIR16

We suggest that the metal plate thickness to be 0.8mm~1.6mm to ensure perfect focal length for the PIR lens.

G. HIR62

PIR sensor head
The cable length is around 30cm.

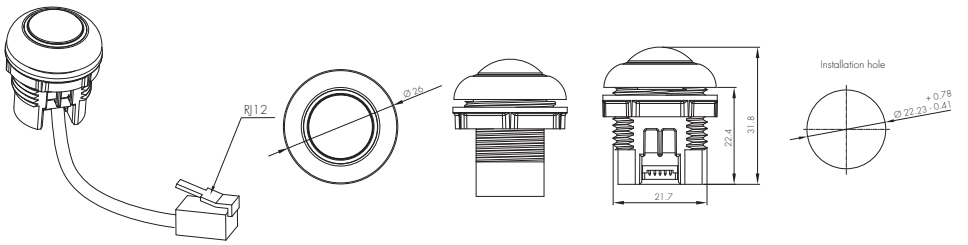

H. HIR62 with HA04

PIR sensor head
Optional accessory
The cable length is around 30cm.

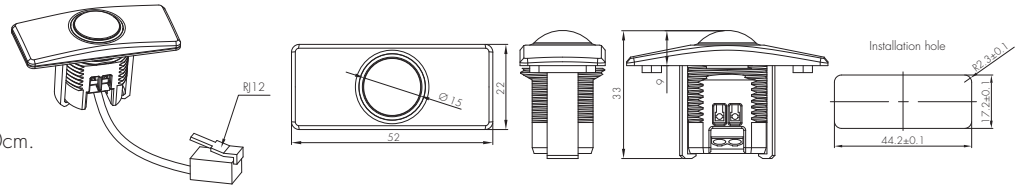

I. HIR62 with HA05

PIR sensor head
Optional accessory
The cable length is around 30cm.

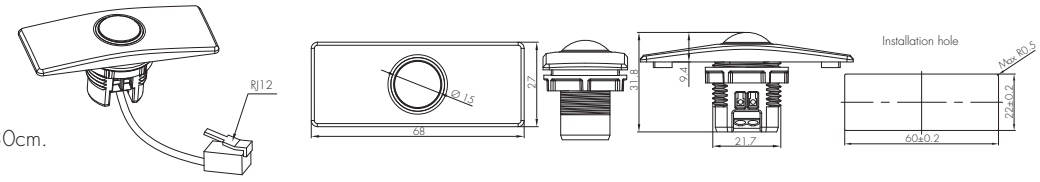

J. HIR62/R

PIR sensor head
IP65 (facia / lens part)
The cable length is around 30cm.

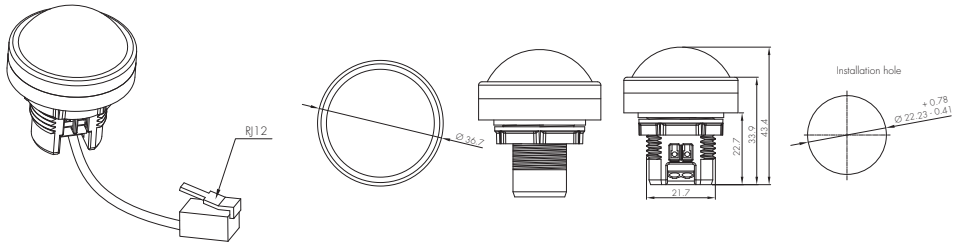

Detection Pattern

HBT01

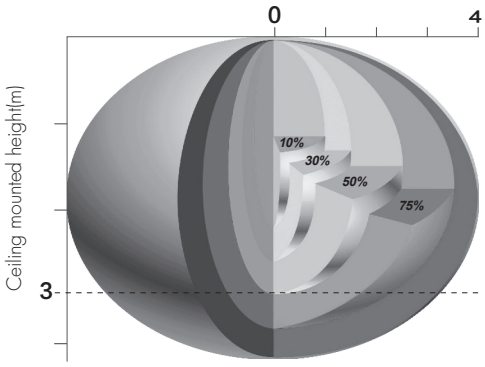

The detection range is heavily influenced by sensor placement (angle) and different walking paces.

It may be reduced to 2m(diameter) & 3m(height) under certain conditions (walking across).

HIR13 (High-bay)

HIR13: High-bay lens detection pattern for **forklift** @ Ta = 20°C

(Recommended installation height **10m-15m**)

A: Tangential movement

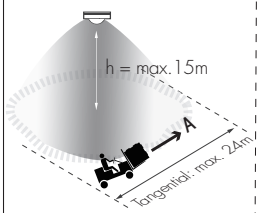

B: Radial movement

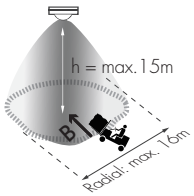

Mount height	Tangential (A)	Radial (B)
10m	max 380m² (Ø = 22m)	max 201m² (Ø = 16m)
11m	max 452m² (Ø = 24m)	max 201m² (Ø = 16m)
12m	max 452m² (Ø = 24m)	max 201m² (Ø = 16m)
13m	max 452m² (Ø = 24m)	max 177m² (Ø = 15m)
14m	max 452m² (Ø = 24m)	max 133m² (Ø = 13m)
15m	max 452m² (Ø = 24m)	max 113m² (Ø = 12m)

HIR13: High-bay lens detection pattern for **single person** @ Ta = 20°C

(Recommended installation height **2.5m-12m**)

A: Tangential movement

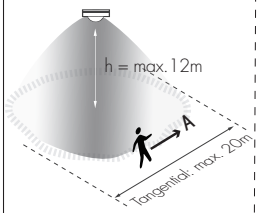

B: Radial movement

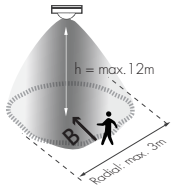

Mount height	Tangential (A)	Radial (B)
2.5m	max 50m² (Ø = 8m)	max 7m² (Ø = 3m)
6m	max 104m² (Ø = 11.5m)	max 7m² (Ø = 3m)
8m	max 154m² (Ø = 14m)	max 7m² (Ø = 3m)
10m	max 227m² (Ø = 17m)	max 7m² (Ø = 3m)
11m	max 269m² (Ø = 18.5m)	max 7m² (Ø = 3m)
12m	max 314m² (Ø = 20m)	max 7m² (Ø = 3m)

HIR16

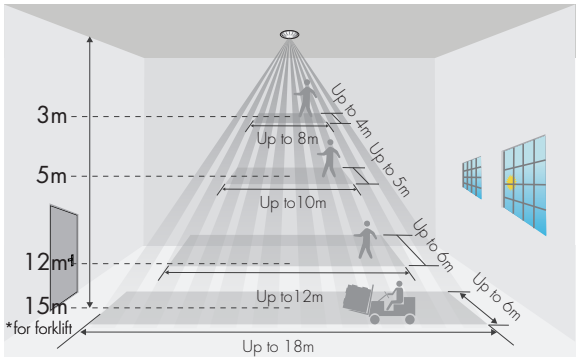

*The detection patterns are based upon 5km/h movement speed.

HIR62

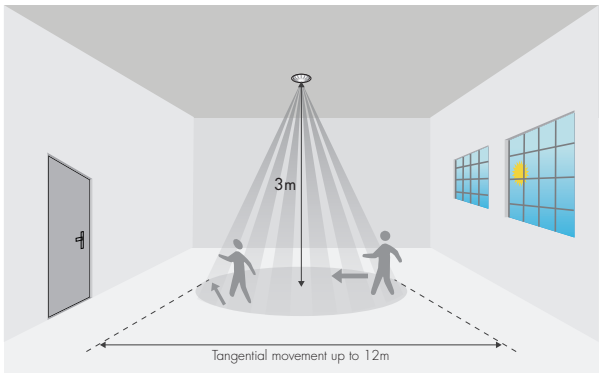

HIR62/R

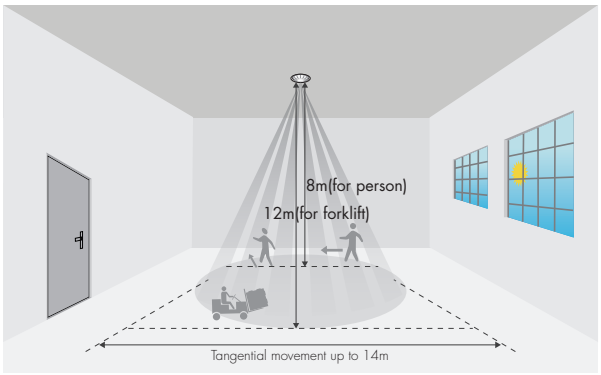

*The detection patterns are based upon 5km/h movement speed.

Dimming Interface Operation Notes

Switch-Dim

The provided Switch-Dim interface allows for a simple dimming method using commercially available non-latching (momentary) wall switches. Detailed Push switch configurations can be set on Koolmesh app.

Switch Function	Action	Descriptions
Push switch	Short press (<1 second) * Short press has to be longer than 0.1s, or it will be invalid.	- Turn on/off - Turn on only - Turn off only - Recall a scene - Exit manual mode - Do nothing
	Double push	- Turn on only - Turn off only - Recall a scene - Exit manual mode - Do nothing
	Long press (≥1 second)	- Dimming - Colour tuning - Do nothing
Simulate sensor	/	- Upgrade a normal on/off motion sensor to a Bluetooth controlled motion sensor

Additional Information / Documents

1. For full explanation of Hytronik Photocell Advance™ technology, please kindly refer to
   www.hytronik.com/download ->knowledge ->Introduction of Photocell Advance

2. To learn more about detailed product features/functions, please refer to
   www.hytronik.com/download ->knowledge ->Introduction of App Scenes and Product Functions

3. Regarding precautions for Bluetooth product installation and operation, please kindly refer to
   www.hytronik.com/download ->knowledge ->Bluetooth Products - Precautions for Product Installation and Operation

4. Regarding precautions for microwave sensor installation and operation, please kindly refer to
   www.hytronik.com/download ->knowledge ->Microwave Sensors - Precautions for Product Installation and Operation

5. Regarding precautions for PIR Sensors installation and operation, please kindly refer to
   www.hytronik.com/download ->knowledge ->PIR Sensors - Precautions for Product Installation and Operation

6. Data sheet is subject to change without notice. Please always refer to the most recent release on
   www.hytronik.com/products/bluetooth technology ->Bluetooth Sensors

7. Regarding Hytronik standard guarantee policy, please refer to
   www.hytronik.com/download ->knowledge ->Hytronik Standard Guarantee Policy