PIR Standalone Motion Sensor with Bluetooth® 5.0 SIG Mesh

HBIR36

Two Trailing Edge Channels Output

HYTRONIK®

CB CE IP20 RED emc

Product Description

HBIR36 is a Bluetooth PIR standalone motion sensor with 2 x 100VA trailing edge output. It is ideal for typical retrofit or refurbishment projects with traditional lamps. With Bluetooth wireless mesh networking, it makes communication between luminaires much easier without time-consuming hardwiring, which is always a headache especially for old buildings – you do not need any extra wirings to upgrade old buildings with smart lighting! Meanwhile, simple device setup and commissioning can be done via **Koolmesh**™ app.

App Features

- Grouping luminaires via mesh network
  - Two levels: room & group
  - Sychronization control
- 5 types of scene options to set up:
  - Generic Scenes
  - Lux ON/OFF Scenes
  - Daylight Harvest (Open loop)
  - Daylight Harvest (Closed loop)
  - Time-based Scene
- Push switch configuration
- Detailed motion sensor settings
- Schedule to run scenes based on time and date
- Astro timer (sunrise and sunset)
- Floorplan feature to simplify project planning
- Staircase function (master & slave)
- Status after re-powered on (memory against power loss)
- Offline commissioning
- Different permission levels via authority management
- Network sharing via QR code or keycode
- Remote control via gateway support HBGW01
- Interoperability with Hytronik Bluetooth product portfolio
- Compatible with EnOcean range of wireless switches
- Device firmware update over-the-air (OTA)
- Continuous development in progress…

Hardware Features

- 2 x 100VA trailing edge output
- 2 Push inputs for flexible manual control
- Surface mount kit available as accessory
- Two types of PIR lens and blinds
- User-friendly design for installation
- High bay version available (up to 20m in height)
- 5-year warranty

Bluetooth 5.0 SIG mesh

iOS 10.0 or later

Android 5.0 or later

EnOcean
Self-powered IoT

Fully support
EnOcean switch

Technical Specifications

Bluetooth Transceiver	
Operation frequency	2.4 GHz - 2.483 GHz
Transmission power	7 dBm
Range (Typical indoor)	10~30m
Protocol	Bluetooth® 5.0 SIG Mesh

Sensor Data	
Sensor principle	PIR detection
Detection range (Max.)*	(Ø x H) 10m x 3m
Detection angle	360°
Mounting height	5m (maximum)

* For more details of detection range, please refer to "detection pattern" section.

Environment	
Operation temperature	Ta: -20°C ~ +45°C
IP rating	IP20

Input & Output Characteristics	
Operating voltage	230VAC 50Hz
Stand-by power	<1W
Load ratings	2x100VA (Capacitive) 2x150W (Resistive)
Warming-up	20s

Safety & EMC	
EMC standard (EMC)	EN55015, EN61000, EN61547
Safety standard (LVD)	EN60669-1, EN60669-2-1 AS/NZS60669-1/-2-1
RED	EN300328, EN301489-1/-17
Certification	CB, CE , EMC, RED, RCM

Mechanical Structure & Dimensions

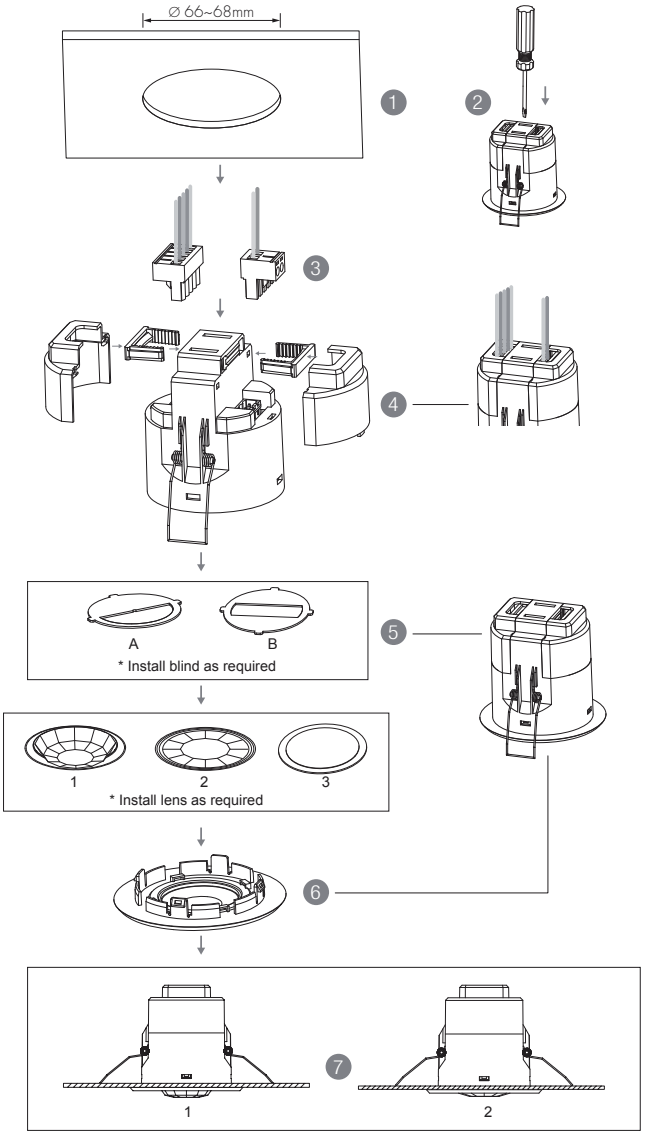

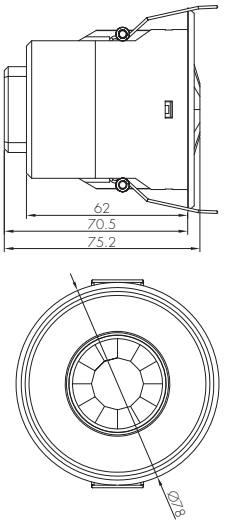

1. Ceiling (drill hole Ø 66~68mm)
2. Carefully prise off the cable clamps.
3. Make connections to the pluggable terminal blocks.
4. Insert plug connectors and secure using the provided cable clamps, then clip terminal covers to the base.
5. Fit detection blind (if required) and desired lens.
6. Clip fascia to body.
7. Bend back springs and insert into ceiling.

Wire Preparation

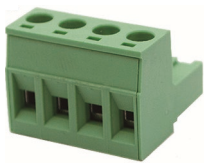

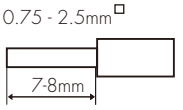

Pluggable screw terminal. It is recommended to make connections to the terminal before fitting to the sensor.

Wiring Diagram

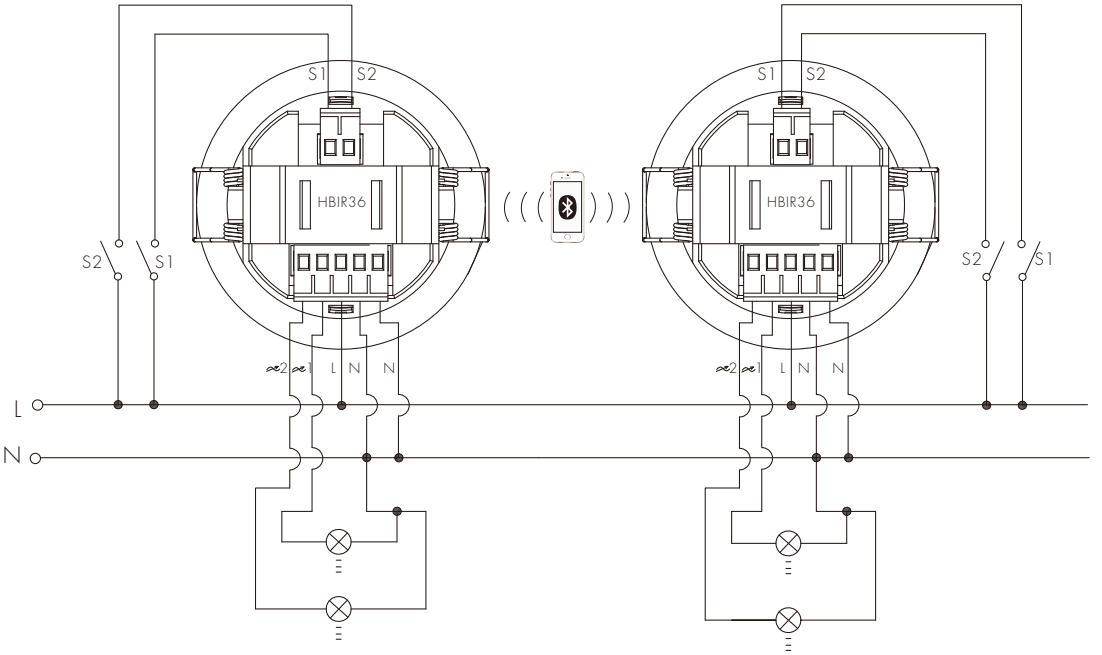

Optional Accessory – Ceiling/Surface Mount Box: HA03

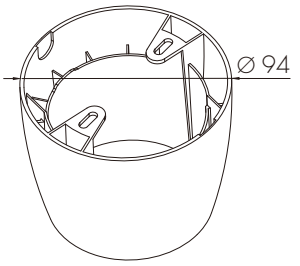

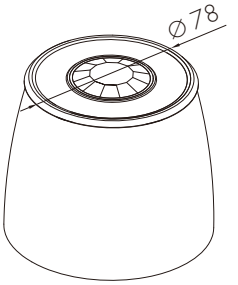

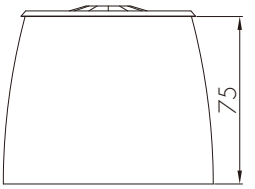

Detection Pattern

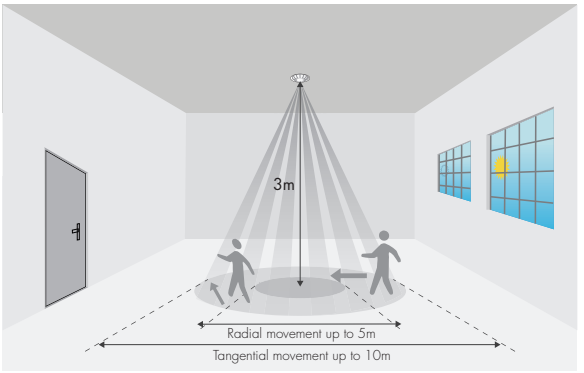

Convex Lens

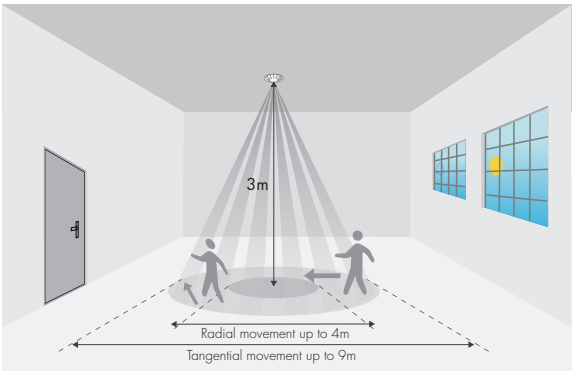

Flat Lens

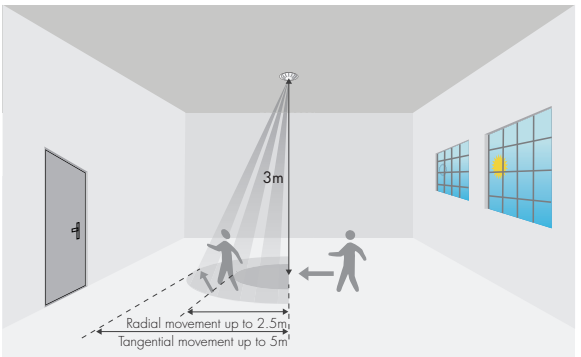

Convex Lens

Blind A

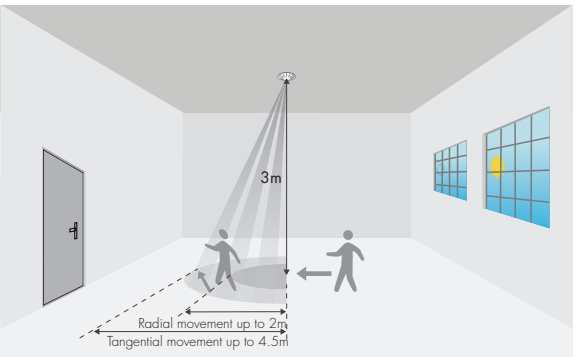

Flat Lens

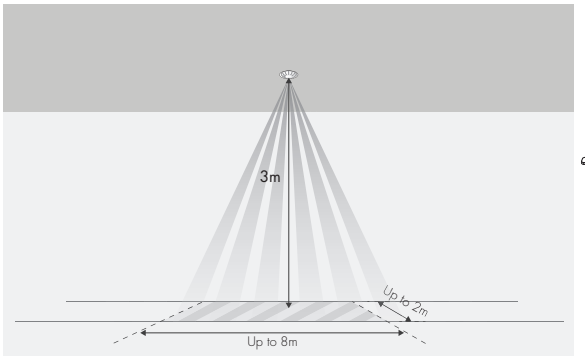

Convex Lens

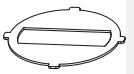

Blind B

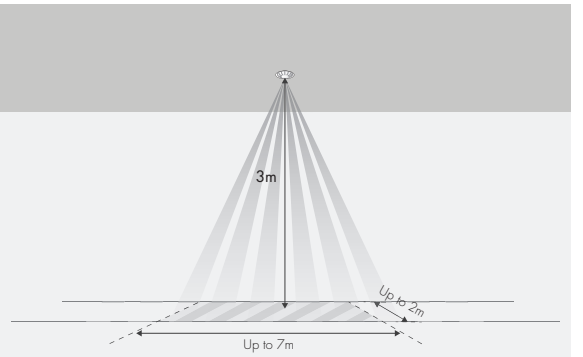

Flat Lens 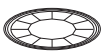

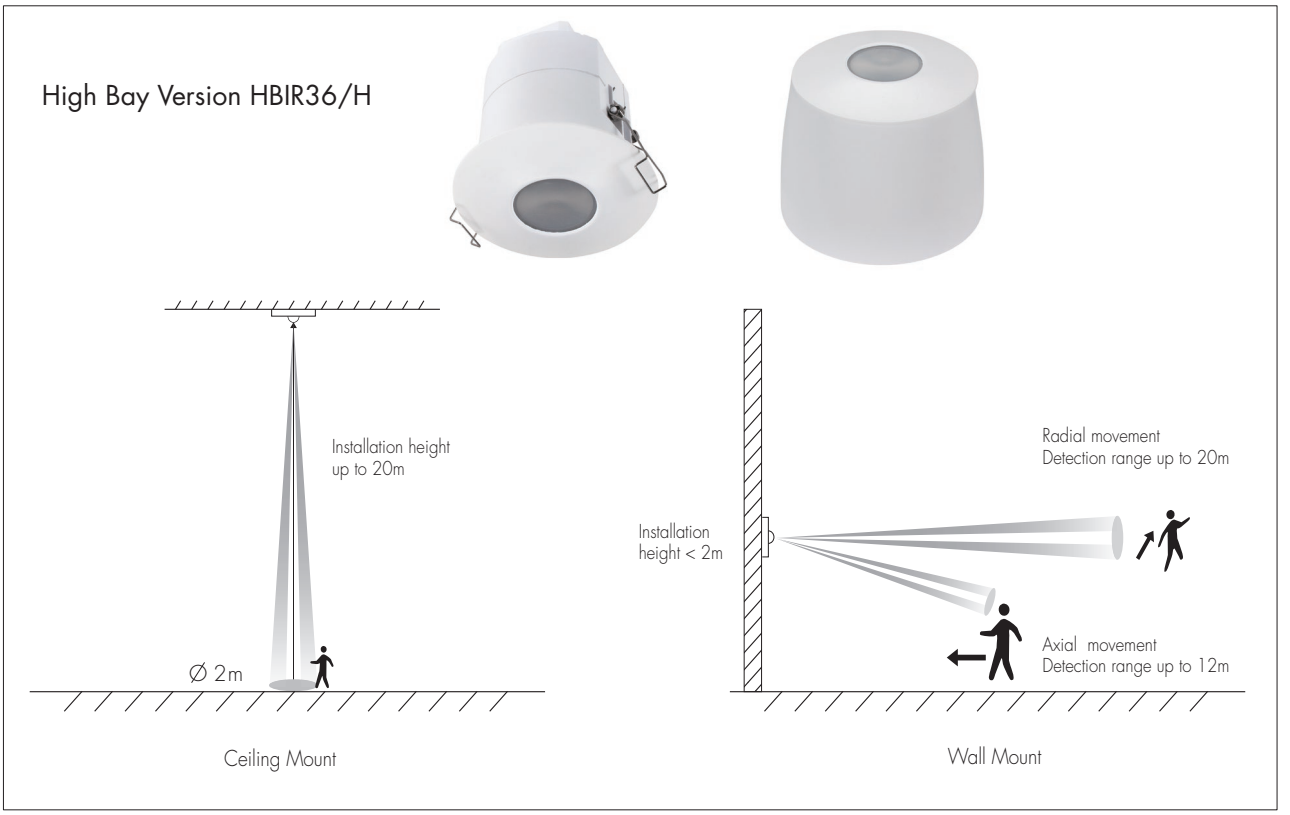

Dimming Interface Operation Notes

Switch-Dim

The provided Switch-Dim interface allows for a simple dimming method using commercially available non-latching (momentary) wall switches. Detailed Push switch configurations can be set on Koolmesh app.

Switch Function	Action	Descriptions
Push switch	Short press (<1 second) * Short press has to be longer than 0.1s, or it will be invalid.	- Turn on/off - Turn on only - Turn off only - Recall a scene - Exit manual mode - Do nothing
	Double push	- Turn on only - Turn off only - Recall a scene - Exit manual mode - Do nothing
	Long press (≥1 second)	- Dimming - Colour tuning - Do nothing
Simulate sensor	/	- Upgrade a normal on/off motion sensor to a Bluetooth controlled motion sensor

Additional Information / Documents

1. To learn more about detailed product features/functions, please refer to
   www.hytronik.com/download ->knowledge ->Introduction of App Scenes and Product Functions
2. Regarding precautions for Bluetooth product installation and operation, please kindly refer to
   www.hytronik.com/download ->knowledge ->Bluetooth Products - Precautions for Product Installation and Operation
3. Data sheet is subject to change without notice. Please always refer to the most recent release on
   www.hytronik.com/products/bluetooth technology ->Bluetooth Sensors
4. Regarding Hytronik standard guarantee policy, please refer to
   www.hytronik.com/download ->knowledge ->Hytronik Standard Guarantee Policy