PIR Standalone Motion Sensor with Bluetooth® Mesh

HBIR29/SV

Technology Partner **SILVAIR**

HYTRONIK®

Bluetooth® CB IP20 RED emc CE

Product Description

HBIR29/SV is a Bluetooth PIR standalone motion sensor with 80mA DALI power supply built in, which can control up to 40 LED drivers. It is ideal for typical indoor applications such as office, classroom, healthcare and other commercial areas. Meanwhile, all commissioning and settings can be done via SILVAIR app.

Functions and Features

- Bluetooth® mesh compliant
- 80mA DALI broadcast output for up to 40 LED drivers
- Surface mount kit available as accessory
- PIR occupancy detection with 2 types of PIR lens and blinds
- Daylight harvesting
- Scene control, Task tuning (0-100%)
- Compact form factor
- Works with DALI LED drivers
- Autonomous sensor-based control
- OTA firmware upgrade
- Continuous dimming
- Individual/group addressing
- Decentralized control (no single point of failure)
- User-friendly design for installation
- High bay version available (up to 20m in height)
- 5-years warranty

EnOcean
Self-powered IoT

Fully support EnOcean switch EWSSB/EWSDB

Download on the APP Store

The access to Silvair apps

mobile app: Silvair on the App Store

web app: platform.silvair.com

Technical Specifications

Bluetooth Transceiver	
Operation frequency	2.4 GHz - 2.483 GHz
Transmission power	4 dBm
Range (Typical indoor)	10~30m
Protocol	Bluetooth® Mesh

Sensor Data	
Sensor principle	PIR detection
Detection range (Max.) HBIR29/SV	Installation Height : 5m Detection Range(Ø) :10m@3m height
Detection range (Max.) HBIR29/SV/H	Installation height: 15m (forklift) 12m (person) Detection range (Ø): 18m
Detection angle	360°
Standard compliance	EN300328, EN301489-1, EN301489-17, EN62479, EN55015, EN61547, EN60669-1, EN60669-2-1, EN62493

Input & Output Characteristics	
Operating voltage	220~240VAC 50/60Hz
Max input current	10mA
Stand-by power	<0.65W (Empty load)
Switched power	Max. 40 devices, 80mA
Warming-up	5s
Tc max	60°C
Lux range	1-1,000lux Tolerance +/– 20%

Environment	
Operation temperature	Ta: –20°C ~ +50°C
Operation humidity (RH%)	10%~90% (Non-condensing)
Storage temperature (°C)	–40°C~+70°C
Storage humidity (RH%)	10%~90% (Non-condensing)
IP rating	IP20

Mechanical Structure & Dimensions

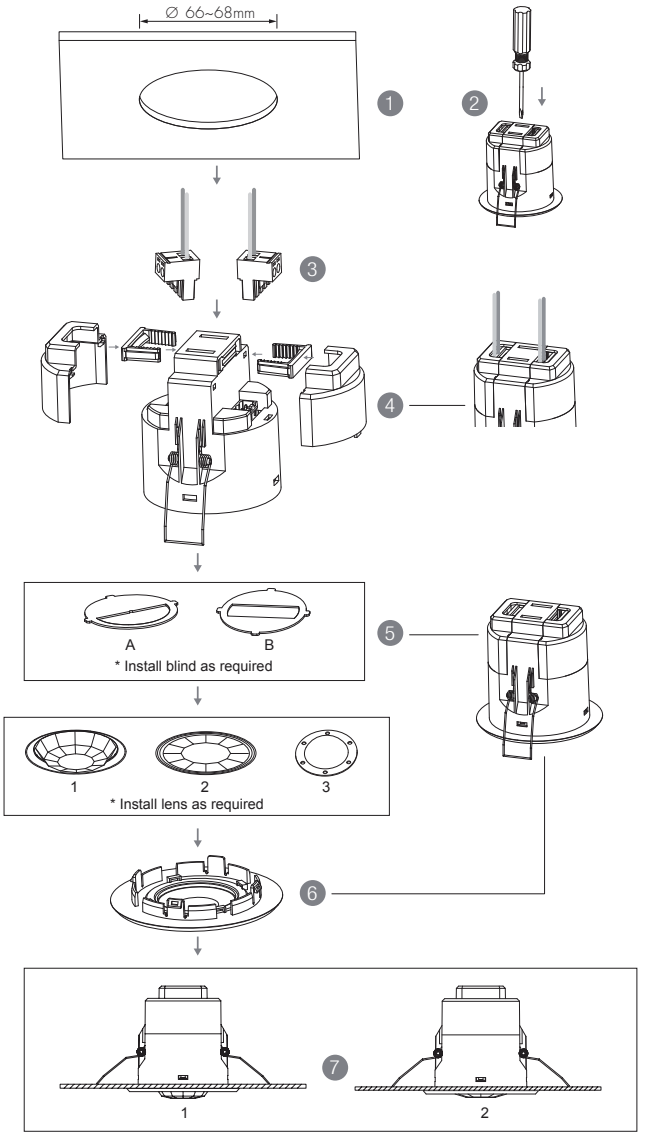

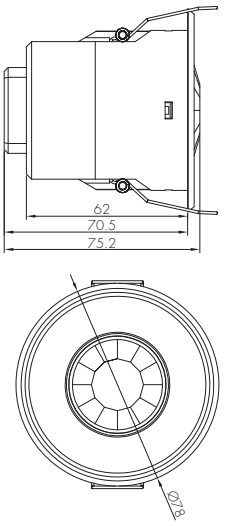

1. Ceiling (drill hole Ø 66~68mm)
2. Carefully prise off the cable clamps.
3. Make connections to the pluggable terminal blocks.
4. Insert plug connectors and secure using the provided cable clamps, then clip terminal covers to the base.
5. Fit detection blind (if required) and desired lens.
6. Clip fascia to body.
7. Bend back springs and insert into ceiling.

Wire Preparation

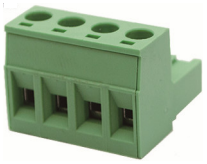

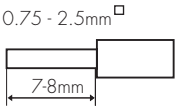

Pluggable screw terminal. It is recommended to make connections to the terminal before fitting to the sensor.

Wiring Diagram

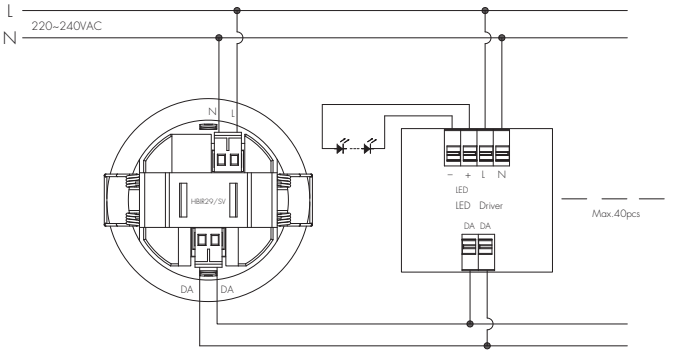

Optional Accessory – Ceiling/Surface Mount Box: HA03

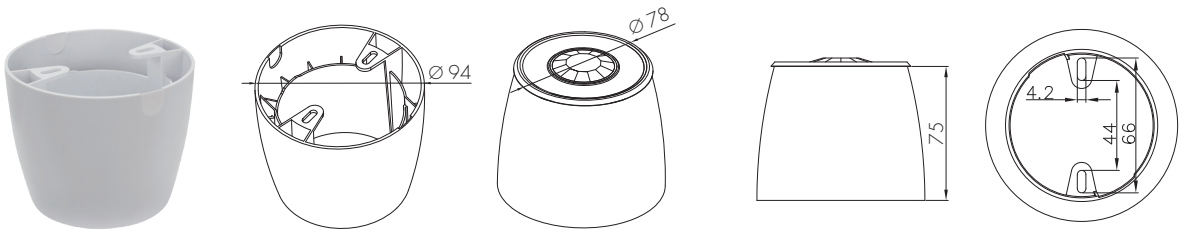

Detection Pattern

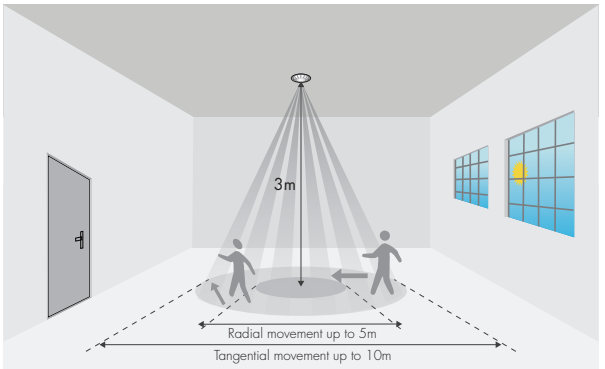

Convex Lens

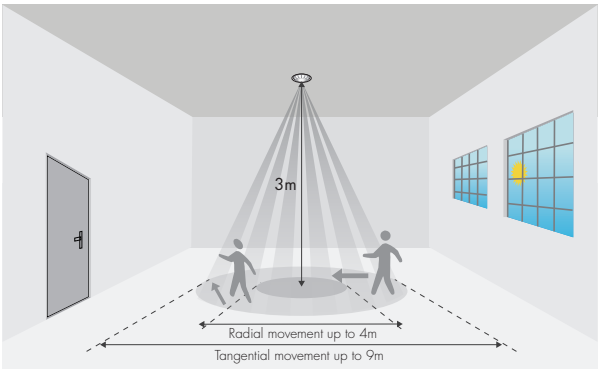

Flat Lens

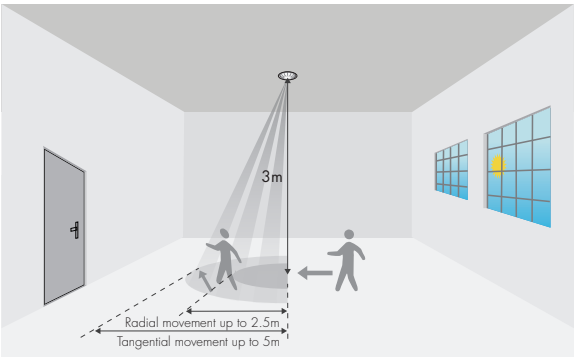

Blind A

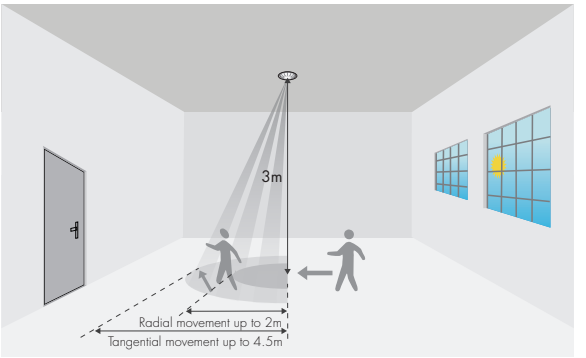

Convex Lens

Flat Lens 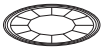

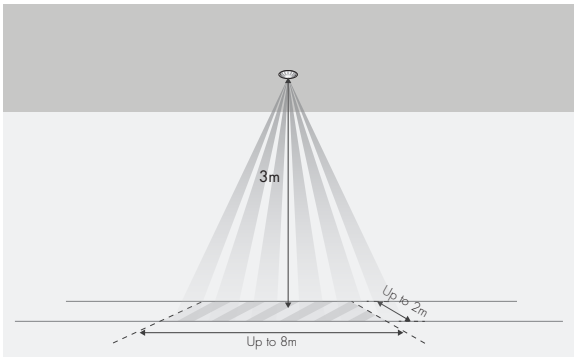

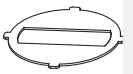

Blind B

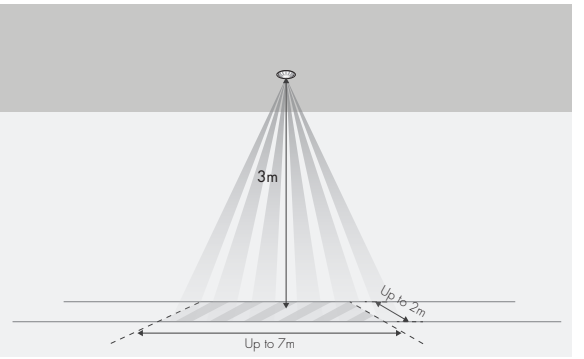

Convex Lens

Flat Lens

High Bay Version HBIR29/SV/H

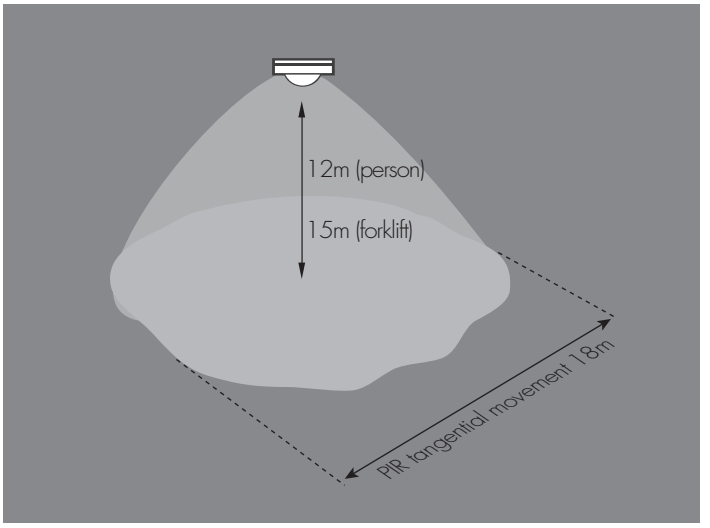

Mesh Factory Reset

The device HBIR29/SV can be reset by placing a strong magnet (e.g. N38 neodymium magnet, d=10mm*h=4mm) near the sensor lens for 5 seconds. Once the factory reset is done successfully, the luminaire flashes and then permanent on, then the device is being able to be re-commissioned by SILVAIR app.

To Reprovision

Place a strong magnet on the site of the Reset/Hall effect sensor (see diagram 4 below). To trigger the reset the magnet must be held in position for 5 seconds.

Diagram 4

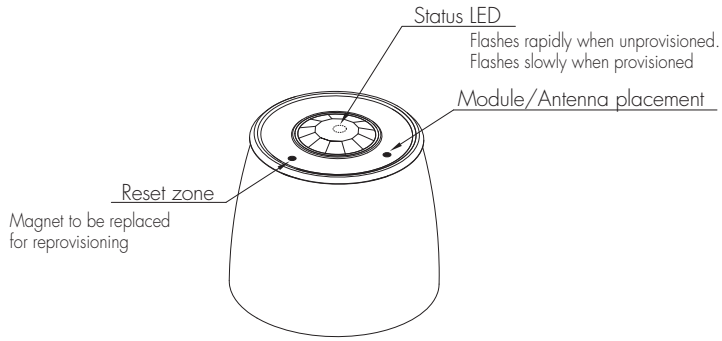

Note: When change the lens part of HBIR29/SV, please kindly make sure that the lens fits the right location, where the "Reset dot" and "BLE dot"matches with the physical location on the PCB.

Status LED blinking Sequence		
HBIR29/SV Unprovisioned	30ms ON	300ms OFF
HBIR29/SV Provisioned	15ms ON	2,000ms OFF
Factory reset	500ms ON	1,000ms OFF
Factory reset (initial burst)	100ms ON	1,000ms OFF
MESH package received	30ms ON	50ms OFF
Attention (from network)	500ms ON	500ms OFF

Supported Bluetooth Mesh Models

Bluetooth mesh models servers	
Mesh model generic default transition time server	Mesh model sensor server
Mesh model generic level server	Mesh model sensor setup server
Mesh model generic onoff server	
Mesh model generic power on off server	
Mesh model generic power on off setup server	
Mesh model light LC server	
Mesh model light LC setup server	
Mesh model light lightness server	
Mesh model light lightness setup server	

Additional Information / Documents

1. Regarding precautions for PIR Sensors installation and operation, please kindly refer to
   www.hytronik.com/download ->knowledge ->PIR Sensors - Precautions for Product Installation and Operation

2. Data sheet is subject to change without notice. Please always refer to the most recent release on
   www.hytronik.com/products/bluetooth technology ->Partnership

3. Regarding Hytronik standard guarantee policy, please refer to
   www.hytronik.com/download ->knowledge ->Hytronik Standard Guarantee Policy