LED Drivers with Bluetooth® 5.0 SIG Mesh

HED1009/BT HED6010/BT HED7030/BT

Dimmable Drivers & Constant Current

HYTRONIK ®

CB CE emc SELV RED

Product Description

This series of LED drivers are Bluetooth dimmable LED drivers, with maximum power output ranging from 9W to 30W. They all come with Switch-Dim interface by using Push switch (retractive switch) and of course Bluetooth dimming interface. It is ideal for direct projects or new luminaires design for lighting manufacturers. With Bluetooth wireless mesh networking, it makes communication between luminaires much easier without time-consuming hardwiring, which eventually saves costs for projects. Meanwhile, simple device setup and commissioning can be done via Koolmesh™ app.

HED1009/BT

HED6010/BT

HED7030/BT

App Features

- Grouping luminaires via mesh network
  - Two levels: zone & group
  - Sychronization control
- 7 types of scene options to set up*
  - Generic Scenes
  - Lux ON/OFF Scenes
  - Daylight Harvest (Open loop)
  - Daylight Harvest (Closed loop)
  - Circadian Rhythm (With daylight sensor)
  - Circadian Rhythm (Without daylight sensor)
  - Time-based Scene
- Push switch configuration
- Schedule to run scenes based on time and date
- Astro timer (sunrise and sunset)
- Floorplan feature to simplify project planning
- Status after re-powered on (memory against power loss)
- Offline commissioning
- Different permission levels via authority management
- Network sharing via QR code or keycode
- Remote control via gateway support HBGW01
- Interoperability with Hytronik Bluetooth product portfolio
- Compatible with EnOcean range of wireless switches
- Device firmware update over-the-air (OTA)
- Internet-of-things (IoT) featured
- Web app/ tool for dedicated project management
- Continuous development in progress…

* Certain scenes which require external photocell can be achieved by using together with Hytronik Bluetooth sensors,such as HBIR29, HCD038/BT + sensor head etc.

Hardware Features

- Switch-Dim
- Bluetooth dimmable control
- Insulated terminal cover with cord restraint
- Standby power <1W
- Active PFC design
- Logarithmic Dimming
- Linear Dimming
- Configurable constant current (CC) output via DIP switch
- Loop-in and loop-out terminals for efficient installation
- Over-temperature Protection
- Short-circuit Protection
- Overload Protection
- 5-year warranty, designed for long lifetime up to 50,000 hours

Draft

EnOcean
Self-powered IoT

Fully support
EnOcean switch
EWSSB/EWSDB

Output Configuration

HED1009/BT, 9W

600mA	●●●●
500mA	●○●●
400mA	○●○●
350mA	●●○○
300mA	○●○○
250mA	●○○○
200mA	○○○○
	1 2 3 4

HED6010/BT, 12.5W

500mA	●●●○
400mA	●○●○
350mA	●●○○
300mA	○●○○
250mA	●○○○
230mA	○○○●
195mA	○○○○
	1 2 3 4

HED7030/BT, 30W

900mA	●●●
750mA	○●●
700mA	●●○
550mA	○●○
500mA	●○○
350mA	○○○
	1 2 3

⚠ Warning: Please make sure the correct current is selected before starting the driver!

Technical Specifications

Bluetooth Transceiver	
Operation frequency	2.4 GHz - 2.483 GHz
Transmission power	7 dBm
Range (Typical indoor)	10~30m
Protocol	Bluetooth® 5.0 SIG Mesh

	Model No.	HED1009/BT	HED6010/BT	HED7030/BT
Input	Mains Voltage	220~240VAC 50/60Hz		
	Mains Current	0.065~0.06A	0.071~0.065A	0.170~0.16A
	Power Factor	0.9		
	Max. Efficiency	80%	80%	85%
Output	Ripple Current	<3%	<3%	<3%
	Uout Max.	45V	52V	75V
	Turn-on Time	<0.5s	<0.5s	<0.5s
	Dimming Interface	Switch-Dim		
Environment	Operation Temp.	-20 ~ +50℃	-20 ~ +50℃	-20 ~ +50℃
	Case Temp. (Max.)	85℃	75℃	80℃
	IP Rating	IP20	IP20	IP20
Safety and EMC	EMC Standard	EN55015, EN61547, EN6100-2/3, EN300328,EN301489-1/-17,EN62479		
	Safety Standard	EN61347-1, EN61347-2-13		
	Dielectric strength	Input→output: 3000VAC / 5mA / 1min		
	Abnormal protection	Output short-circuit protection		

Draft

Model No.	Max. output power/current/voltage range			
HED1009/BT	2-6W/ 200mA /6-28V	2-9W/ 400mA /6-22V	2-9W/ 600mA /6-15V	
HED6010/BT	1.5-8W/ 195mA /6-41V 2.5- 12.8W/ 350mA /6-36V	1.5-9W/ 230mA /6-41V 2.5-12.8W/ 400mA /6-32V	1.5-10W/ 250mA /6-41V 3-12.5W/ 500mA /6-25V	2-12W/ 300mA /6-41V
HED7030/BT	3.5-21W/350mA /10-60V 7.5-30W/750mA /10-40V	5-30W/500mA /10-60V 9-23W/900mA /10-25V	5.5-30W/550mA /10-55V	7-30W/700mA /10-43V

Mechanical Structure & Dimensions

HED1009/BT, 1x9W

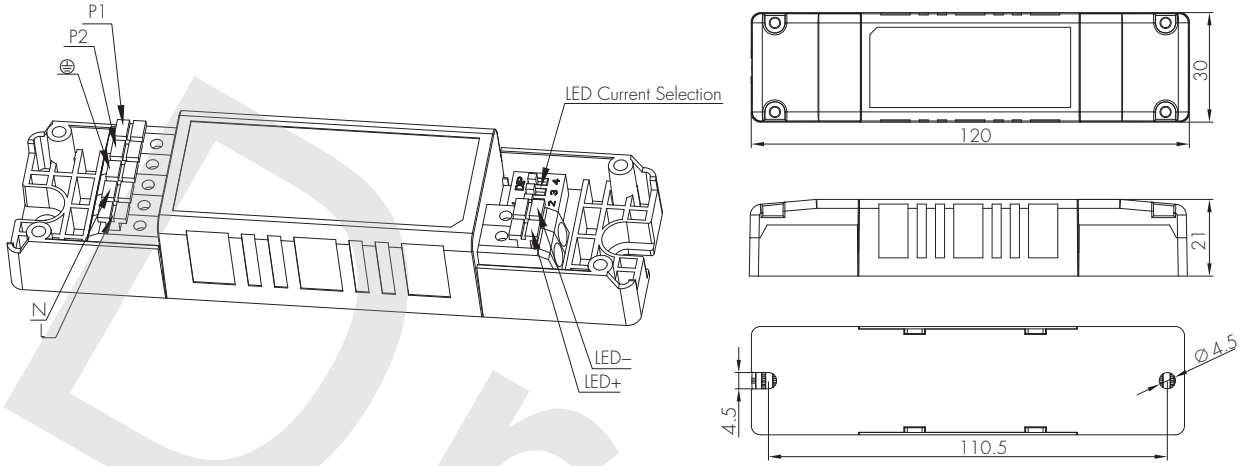

HED6010/BT, 1x10W

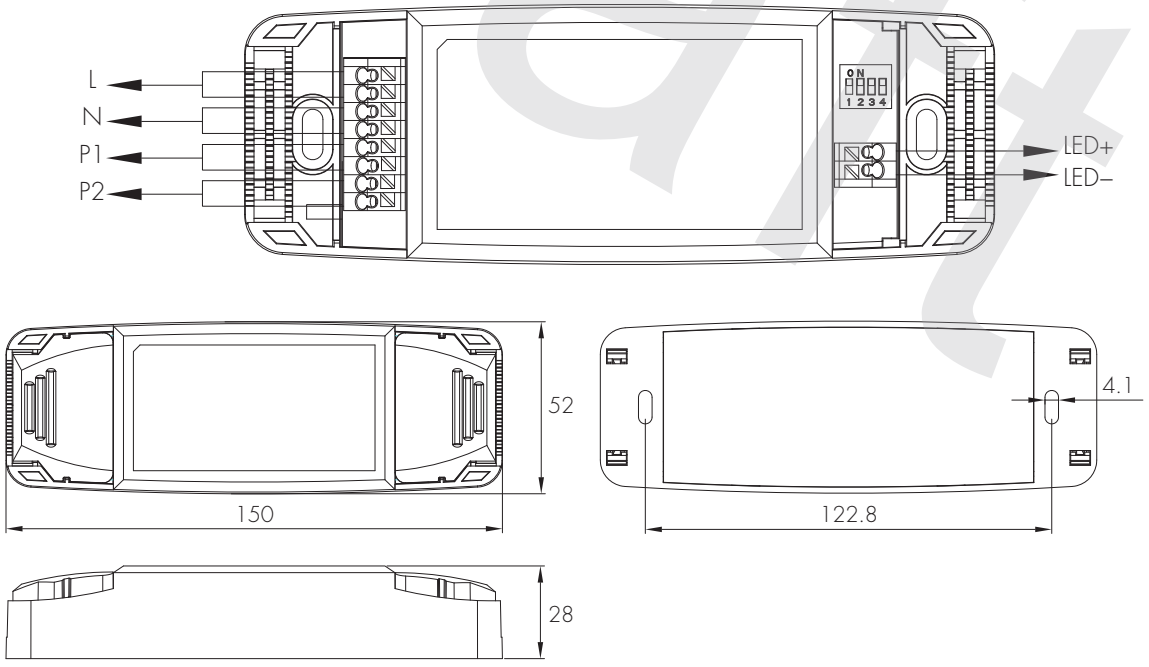

Draft

HED7030/BT, 1x30W

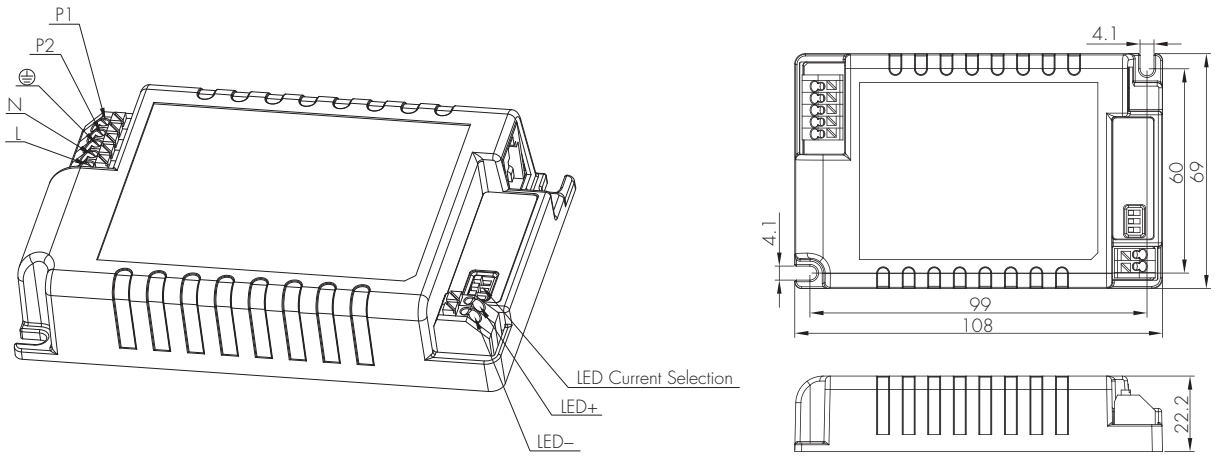

Wire Preparation

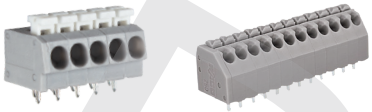

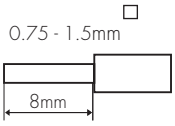

To make or release the wire from the terminal, use a screwdriver to push down the button.

Wiring Diagram

Model: HED1009/BT

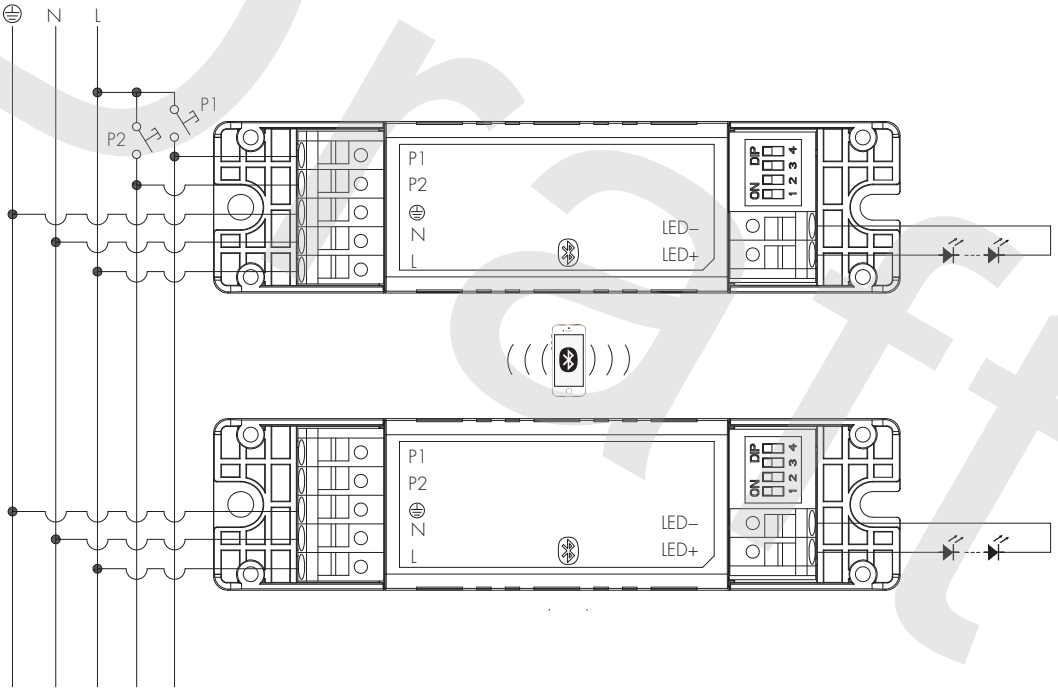

Note: There is no need for any hardwirings on "push" terminal between one driver to another. The installer only needs to connect the push switches to the nearest driver to save labor and cost. The push switches can be assigned to control any Bluetooth driver through the app commissioning.

Draft

Model: HED6010/BT

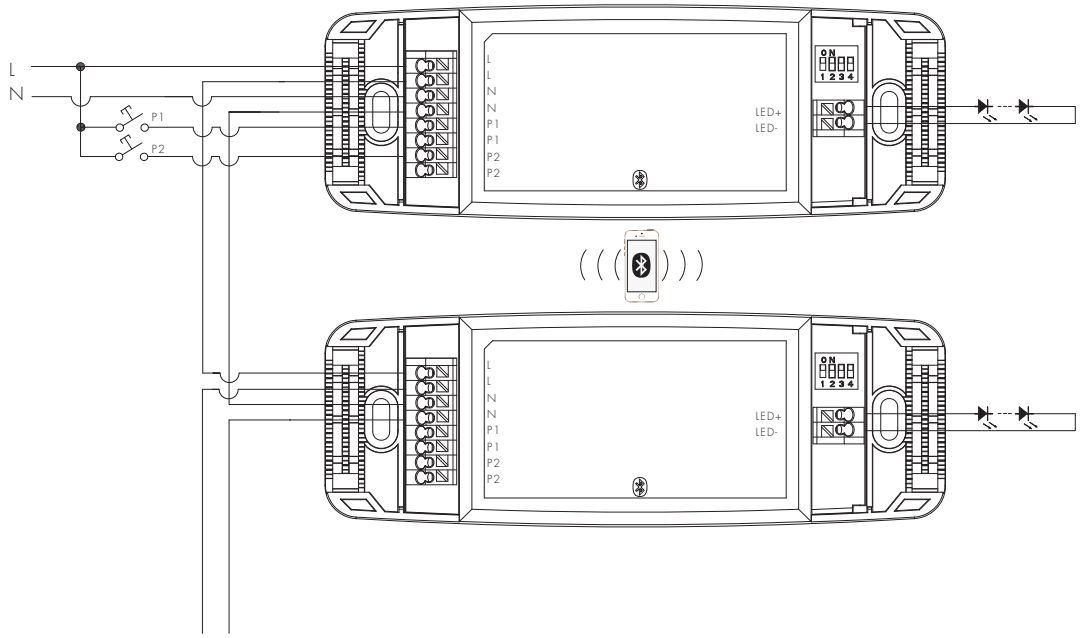

Note: There is no need for any hardwirings on "push" terminal between one driver to another. The installer only needs to connect the push switches to the nearest driver to save labor and cost. The push switches can be assigned to control any Bluetooth driver through the app commissioning.

Model: HED7030/BT

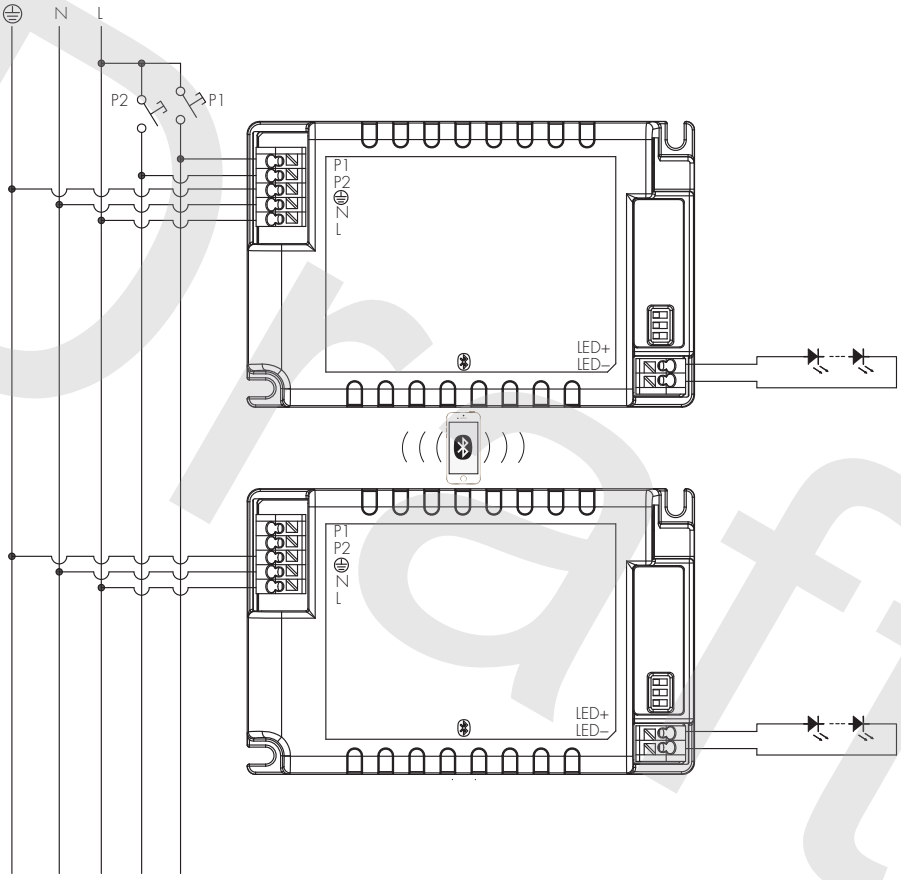

Note: There is no need for any hardwirings on "push" terminal between one driver to another. The installer only needs to connect the push switches to the nearest driver to save labor and cost. The push switches can be assigned to control any Bluetooth driver through the app commissioning.

Draft

Loading and In-rush Current

Circuit Breaker Information

Automatic circuit breaker type	B16A	B10A	B13A	B20A	B25A
HED1009/BT	176	110	143	220	276
HED6010/BT	142	89	115	178	222
HED7030/BT	54	34	43	67	84

The data above is calculated according to the formula: Maximum Amount = 16/(Pn/230). In order to provide a more reliable reference in real application, the data have been revised to take 60% of the number calculated, i.e. 16/(Pn/230) x 60%. Please kindly take note that the calculation is based on ABB circuit breaker series S200. Actual values may differ due to different types of circuit breaker used and installation environment.

Performance Characteristics

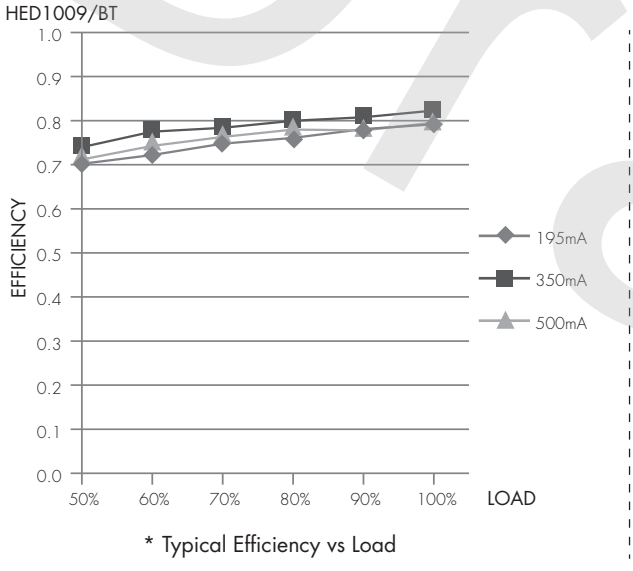

* Typical Efficiency vs Load

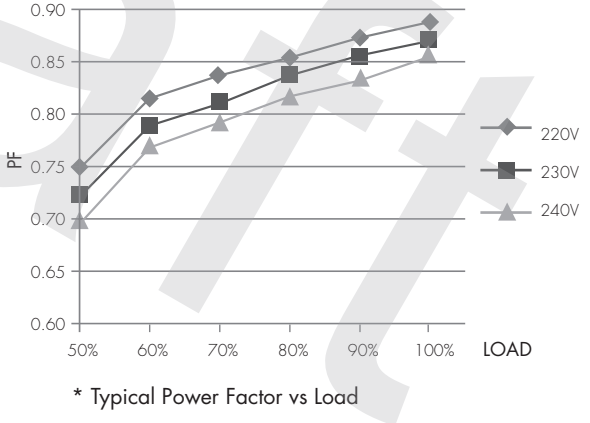

* Typical Power Factor vs Load

Draft

HED6010/BT

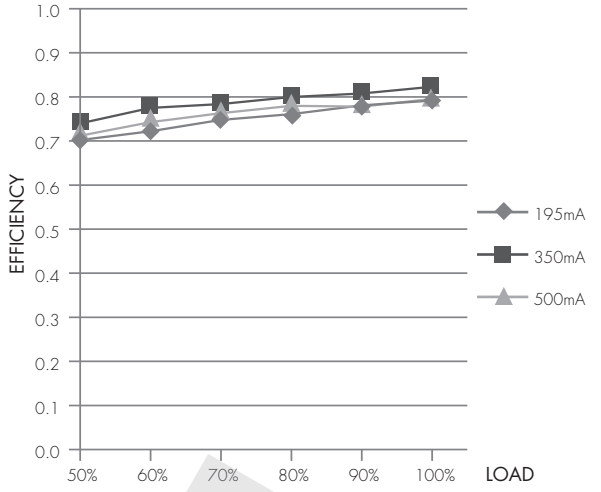

* Typical Efficiency vs Load

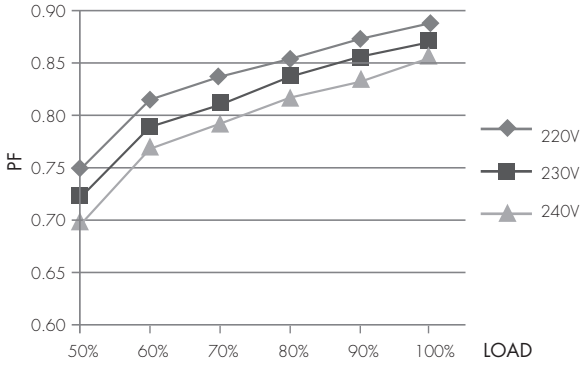

* Typical Power Factor vs Load

HED7030/BT

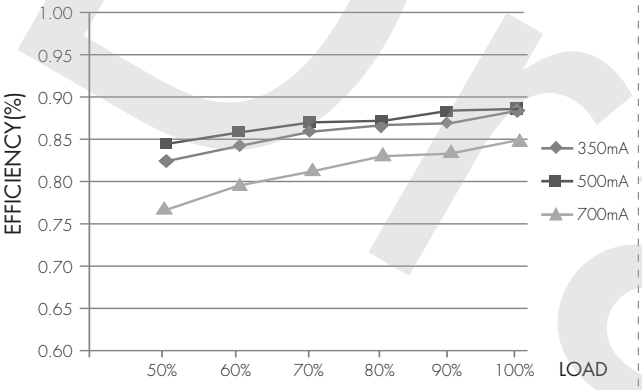

* Typical Efficiency vs Load

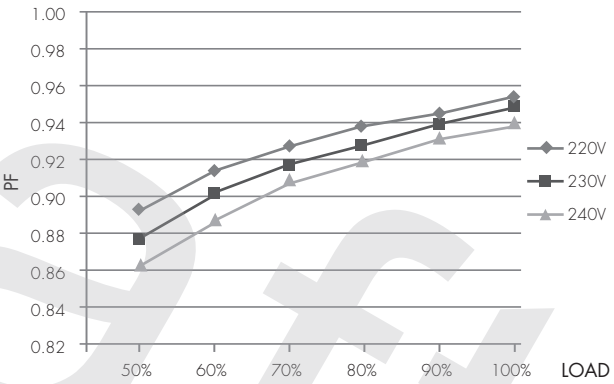

* Typical Power Factor vs Load

Dimming Characteristics

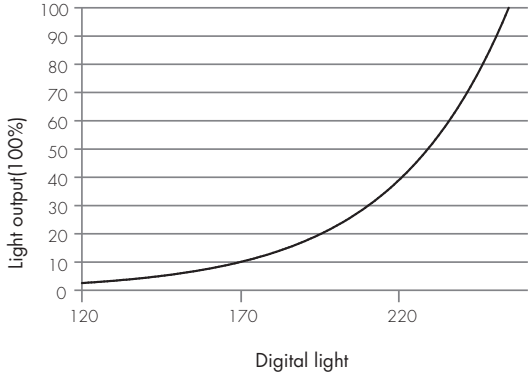

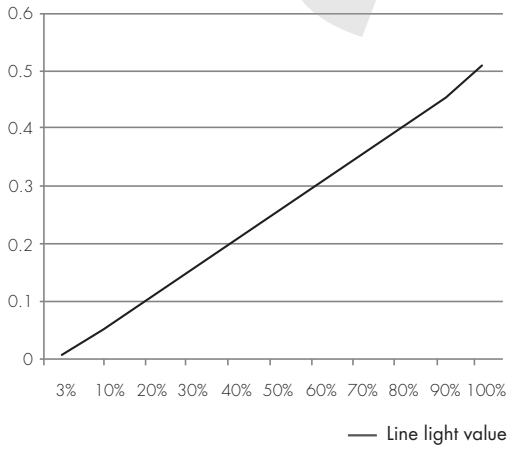

Draft

Dimming Profile

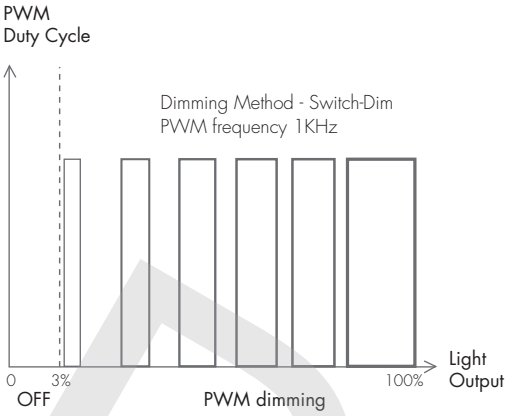

Dimming range	Dimming technique
3%-100%	PWM
0-3%	OFF

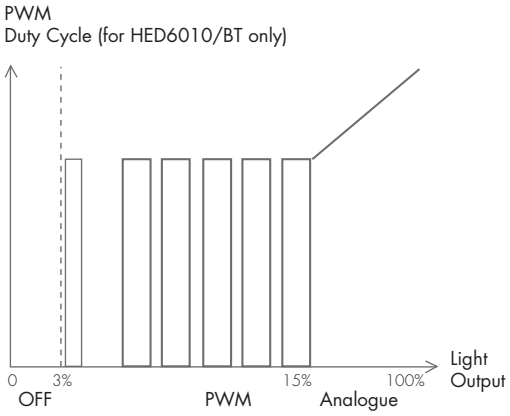

Dimming range	Dimming technique
0-3%	OFF
3-15%	PWM
15-100%	Analogue

Dimming Interface Operation Notes

Switch-Dim

The provided Switch-Dim interface allows for a simple dimming method using commercially available non-latching (momentary) wall switches. Up to 64 LED drivers maybe connected to one switch. Detailed Push switch configurations can be set on Koolmesh app.

Switch Function	Action	Descriptions
Push switch	Short press (<1 second) * Short press has to be longer than 0.1s, or it will be invalid.	- Turn on/off - Turn on only - Turn off only - Recall a scene - Exit manual mode - Do nothing
	Double push	- Turn on only - Turn off only - Recall a scene - Exit manual mode - Do nothing
	Long press (≥1 second)	- Dimming - Colour tuning - Do nothing
Simulate sensor	/	- Upgrade a normal on/off motion sensor to a Bluetooth controlled motion sensor

Additional Information / Documents

1. Regarding precautions for LED driver installation and operation, please kindly refer to www.hytronik.com/download ->knowledge ->LED Drivers - Precautions for Product Installation and Operation

2. To learn more about detailed product features/functions, please refer to www.hytronik.com/download->knowledge ->Introduction of App Scenes and Product Functions

3. Regarding precautions for Bluetooth product installation and operation, please kindly refer to www.hytronik.com/download ->knowledge ->Bluetooth Products - Precautions for Product Installation and Operation

4. Data sheet is subject to change without notice. Please always refer to the most recent release on www.hytronik.com/products/bluetooth technology ->Bluetooth Drivers

5. Regarding Hytronik standard guarantee policy, please refer to www.hytronik.com/download ->knowledge ->Hytronik Standard Guarantee Policy

Draft